Product data sheet

Specifications

4 safety relay outputs expansion module with spring term

XPSMCMER0004G

Product availability: Non-Stock - Not normally stocked in distribution facility

Price*: 603.00 USD

Main

Range Of Product	Preventa Safety automation
Product Or Component Type	Safe relay output module
Device Short Name	XPSMCM
Electrical Connection	Spring terminal
[Us] Rated Supply Voltage	24 V - 20...20 % DC
Number Of Outputs	4 relay
Function Of Module	Monitoring safety actuators relay output

Complementary

Maximum Power Dissipation In W	3 W
Integrated Connection Type	Not connected to backplane expansion bus
Switching Voltage	10 V DC
Associated Fuse Rating	3.5 A, slow-blow
Safety Level	Can reach category 4 ISO 13849-1 Can reach PL = e ISO 13849-1 Can reach SIL 3 IEC 61508 SILCL 3 IEC 62061
Quality Labels	CE
Output Type	Relay, 4 NO + 2 NC, volt-free
Quantity Per Set	1
Switching Time	12 ms
Maximum Switching Voltage	400 V AC 250 V DC
Minimum Switching Current	20 mA
Maximum Switching Current	6 A
Number Of Terminal Blocks	6
Local Signalling	1 LED green PWR power ON 1 LED green RUN RUN (status) 1 LED red E IN internal error 1 LED red E EX external error 2 LEDs orange ADDR node address 2 LEDs green/red RELAY K1...K2 relay contact
Connections - Terminals	1 spring clamp terminals, removable terminal block 2 spring clamp terminals, removable terminal block

Price is “List Price” and may be subject to a trade discount – check with your local distributor or retailer for actual price.

Disclaimer: This documentation is not intended as a substitute for and is not to be used for determining suitability or reliability of these products for specific user applications

Cable Cross Section	0.00…0.00 in² (0.2…2.5 mm²) - AWG 24...AWG 14 flexible without cable end 0.00…0.00 in² (0.25…2.5 mm²) - AWG 23...AWG 14 flexible with cable end, with bezel 0.00…0.00 in² (0.25…2.5 mm²) - AWG 23...AWG 14 flexible with cable end, without bezel 0.00…0.00 in² (0.2…2.5 mm²) - AWG 24...AWG 14 solid without cable end 0.00…0.00 in² (0.5…1 mm²) - AWG 20...AWG 18 flexible with cable end, with double bezel
Mounting Support	Omega 35 mm DIN rail EN 50022
Width	0.89 in (22.5 mm)
Height	3.90 in (99 mm)
Depth	4.51 in (114.5 mm)
Net Weight	0.66 lb(US) (0.3 kg)

Environment

Standards	IEC 61800-5-1 IEC 61508 IEC 62061 ISO 13849-1
Product Certifications	cULus RCM TÜV
Ip Degree Of Protection	IP20
Ambient Air Temperature For Operation	14…131 °F (-10…55 °C)
Ambient Air Temperature For Storage	-4…185 °F (-20…85 °C)
Relative Humidity	10…95 %
Pollution Degree	2
[Uimp] Rated Impulse Withstand Voltage	4 kV IEC 61800-5-1
Safety Reliability Data	B10d = 300000 AC-15 230 V, , <3 A ISO 13849-1 B10d = 750000 AC-15 230 V, , <1 A ISO 13849-1 B10d = 10000000 DC-13 24 V, , <2 A ISO 13849-1
Insulation	250 V AC between power supply and housing IEC 61800-5-1
Overvoltage Category	II
Electromagnetic Compatibility	Electrostatic discharge immunity test - test level: 6 kV (on contact) conforming to IEC 61000-4-2 Electrostatic discharge immunity test - test level: 20 kV (on air) conforming to IEC 61000-4-2 Susceptibility to electromagnetic fields - test level: 10 V/m (80...1000 MHz) conforming to IEC 61000-4-3 Susceptibility to electromagnetic fields - test level: 30 V/m (1.4 GHz...2 GHz) conforming to IEC 61000-4-3
Vibration Resistance	+/-0.35 mm 10…55 Hz)IEC 61496-1
Shock Resistance	10 gn 16 ms 1000 shocks on each axis)IEC 61496-1
Electrical Durability	20000000 cycles
Mechanical Durability	20000000 cycles
Service Life	20 year(s)

Ordering and shipping details

Category	US1SAF222477
Discount Schedule	SAF2
Gtin	3606480748813

Returnability	No
Country Of Origin	IT

Packing Units

Unit Type Of Package 1	PCE
Number Of Units In Package 1	1
Package 1 Height	1.77 in (4.5 cm)
Package 1 Width	5.04 in (12.8 cm)
Package 1 Length	6.38 in (16.2 cm)
Package 1 Weight	10.37 oz (294.0 g)
Unit Type Of Package 2	S01
Number Of Units In Package 2	6
Package 2 Height	5.91 in (15.0 cm)
Package 2 Width	5.91 in (15.0 cm)
Package 2 Length	15.75 in (40.0 cm)
Package 2 Weight	4.42 lb(US) (2.003 kg)

Sustainability

Green Premium™ label is Schneider Electric's commitment to delivering products with best-in-class environmental performance. Green Premium promises compliance with the latest regulations, transparency on environmental impacts, as well as circular and low-CO_2 products.

Guide to assessing product sustainability is a white paper that clarifies global eco-label standards and how to interpret environmental declarations.

Learn more about Green Premium >

Guide to assess a product's sustainability >

Transparency RoHS/REACh

Well-being performance

Reach Free Of Svhc	
Mercury Free	
Rohs Exemption Information	Yes
Pvc Free	

Certifications & Standards

Reach Regulation	REACh Declaration
Eu Rohs Directive	Pro-active compliance (Product out of EU RoHS legal scope)
China Rohs Regulation	China RoHS declaration
Environmental Disclosure	Product Environmental Profile
Weee	The product must be disposed on European Union markets following specific waste collection and never end up in rubbish bins.
Circularity Profile	End of Life Information
California Proposition 65	WARNING: This product can expose you to chemicals including: Lead and lead compounds, which is known to the State of California to cause cancer and birth defects or other reproductive harm. For more information go to www.P65Warnings.ca.gov

Dimensions Drawings

Dimensions

Spring Terminal

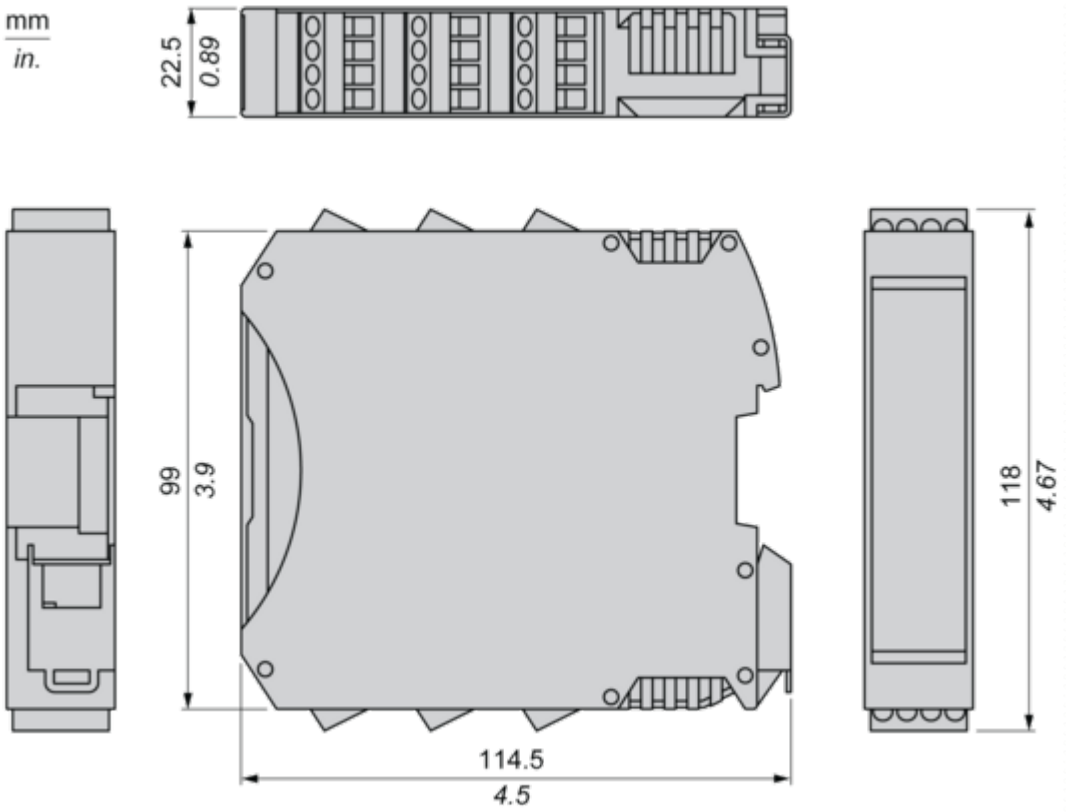

Connections and Schema

Wiring

Wiring Example

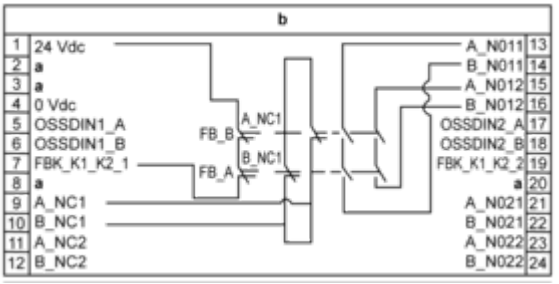

a : Not connected
b : Safe Relay output module